Boring tools & drilling tools



CKB*-TWN



G002

CKB*-EWN



G003

RDH-D*-L



G004

CDH-D*-L



G004

BJ*BE*A



G005

CDH-D*-L



G005

WBJ**



G006

WBJ**



G006

EC*/ST*/BE*



G007

NBH*



G008

SBJ**



G008

BT*-NBH*-P



G008

SC*-CKB*-L



G009

BT*-CKB*



G010

Extenstion



G011

Extenstion



G011

BT*-DW*



G012

SPMG2D/3D/4D



G014-G016

WCMX2D/3D/4D



G017-G019

SPMG**



G020

Eccentric Sleeve



G021

Two-Blade Rough Boring Head

《Boring Range form Φ25-Φ204mm》



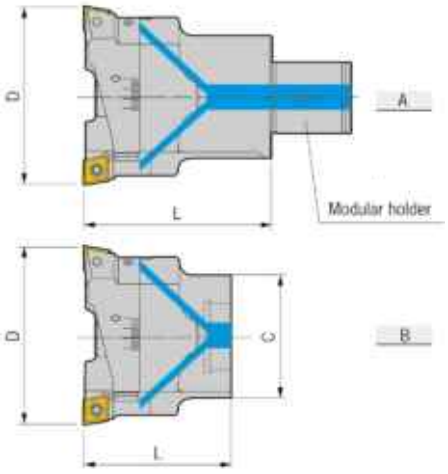

Ordering Code	Stock	Dc	dm	L	Insert	Screw	Wrench	Cutter block	Clamp screw	Weight
CKB1-TWN2026-35	●	20-26	19	35	CC..0602..	M2.5X6.5	T8	TW20-26M	TW20TS	0.07
CKB2-TWN2533-38	●	25-33	24	38	CC..0602..	M2.5X6.5	T8	TW25-33M	TW25TS	0.14
CKB3-TWN3242-43	●	32-42	31	43	CC..09T3..	M4X10	T15	TW32-42M	TW30TS	0.23
CKB4-TWN4154-50	●	41-54	39	50	CC..09T3..	M4X10	T15	TW41-54M	TW40TS	0.43
CKB5-TWN5372-60	●	53-72	49	60	CC..1204..	M4X13	T20	TW53-72M	TW50TS	0.82
CKB6-TWN6890-75	●	68-90	63	75	CC..1204..	M5X13	T20	TW68-90M	TW50TS	1.75
CKB6-TWN89120-75	●	89-120	63	75	CC..1204..	M5X13	T20	TW89-120M	TW50TS	2.25
CKB6-TWN115150-75	●	115-150	63	75	CC..1204..	M5X13	T20	TW115-150M	TW50TS	2.35

Features:

1.Thickened cartridge with higher rigidty;
2.Coolant mozzle easify cools the insert elongating its working life;
3.Comlteptd with chip pocket,improving chipflow ofdeep boring;
4.Clamp plate solidifies cartridges and head,upgrading cutting rigidity.
5.Patented step boring design,suitable for both level boring and step boring.

●Stock ○Availabie upon Order

EWN Micro–Finishing Boring Head

《Boring Range form Φ25–Φ204mm》



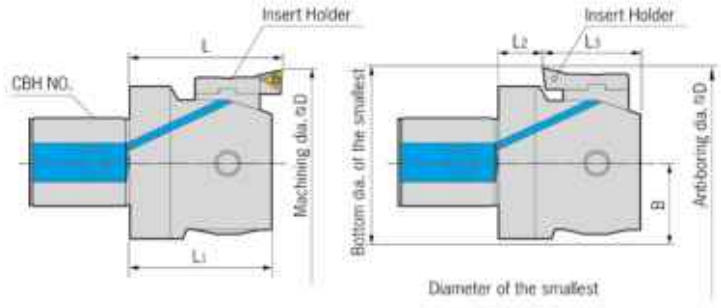

Ordering Code	Stock	dm	L	DC	Cutter block	Insert	Screw	Wrench	Weight
CKB1–EWN2036–32.5	●	19	32.5	20–26	ENH1–1	TP..0802..	TP..0802..	T7	0.09
	●			25–31	ENH1–2				
	●			30–36	ENH1–3				
CKB2–EWN2547–35.5	●	24	35.5	25–33	ENH2–1				0.15
	●			32–40	ENH2–2				
	●			39–47	ENH2–3				
CKB3–EWN3260–40	●	31	40	32–42	ENH3–1				0.25
	●			41–51	ENH3–2				
	●			50–60	ENH3–3				
CKB4–EWN4174–47	●	39	47	41–54	ENH4–1	TC..1102.. TP..1103..	TC..1102.. TP..1103..	T8	0.43
	●			53–66	ENH4–2				
	●			61–74	ENH4–3				
CKB5–EWN5395–57	●	49	57	53–70	ENH5–1				1.25
	●			68–85	ENH5–2				
	●			78–95	ENH5–3				
CKB6–EWN68150–71	●	63	71	68–100	ENH6–1				1.78
	●			93–125	ENH6–2				
	●			125–150	ENH6–3				
CKB6–EWN100203–71	●	63	71	100–153	ENH6–1				2.53
	●			125–178	ENH6–2				
	●			150–203	ENH6–3				

1.There are pre–balanced design,availability and stability of the machining accuracy.
2.Standard corresponding to the anti–boring work processing,using a wide range of increasing added value.



PAT.P

Tape	Stock	Fig	Boring head	Tape	Fig	Boring head
ENH1–1	●	 TP08	EWN20–31	ENH4–1	 TC11 TP11	EWN46–71
ENH1–2	●			ENH4–2		
ENH2–1	●		EWN30–45	ENH5–1		EWN58–90
ENH2–2	●			ENH5–2		
ENH3–1	●		EWN37–56	ENH6–1		EWN73–130
ENH3–2	●			ENH6–2		

●Stock ○Availabie upon Order

Indexable Two–blade Rough Boring Head



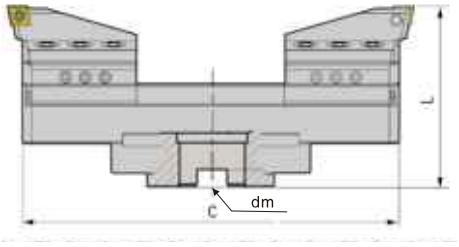

Ordering Code	Stock	dm	L	C	Insert	Cutter block	Extension Side	Clamp	Screw	Screw	Wrench	Weight
RDH–D122–152–80L	●	32	84	122–152	CC..1204	RDH–CC12	HB122–152	RDH–HK	NLJ–M8	M5*13	T20	3
RDH–D151–211–80L	●			151–211			HB151–211					5
RDH–D210–290–80L	●			210–290			HB210–290					5.9
RDH–D290–370–80L	●			290–370			HB290–370					6.8
RDH–D370–450–80L	●			370–450			HB370–450					7.8
RDH–D450–550–80L	●			450–550			HB450–550					8.8
RDH–D550–650–80L	○			550–650			HB550–650					9.9
RDH–D650–750–80L	○			650–750			HB650–750					10.9

Indexable Two–blade Mirco–Finishing Boring Head



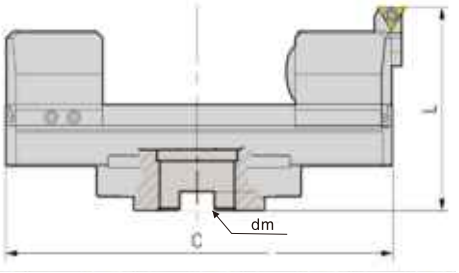

Ordering Code	Stock	dm	L	C	Insert	Boring	Clump weight	Extension Side	Screw	Screw	Wrench	Weight
CDH–D122–152–84L	●	32	84	122–152	TP..0902	CDH–TT	CDH–PHK	HB122–152	NLJ–M8	M5*13	T20	3
CDH–D151–211–84L	●			151–211	TP..1103			HB151–211				4.8
CDH–D210–290–84L	●			210–290				HB210–290				5.2
CDH–D290–370–84L	●			290–370				HB290–370				6.1
CDH–D370–450–84L	●			370–450				HB370–450				7
CDH–D450–550–84L	●			450–550				HB450–550				8
CDH–D550–650–84L	●			550–650				HB550–650				9
CDH–D650–750–84L	●			650–750				HB650–750				10

●Stock ○Availabie upon Order

Outside diameter boring series

☐S type Processing range:Φ0.5~Φ27



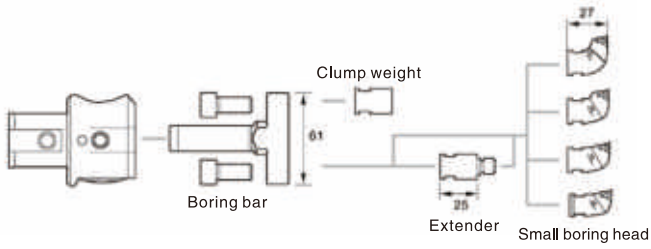

	Ordering Code	Stock	Processing diameter Φd	EW boring head	Boring bar	Clump weight	Extender	Small boring head	Blade
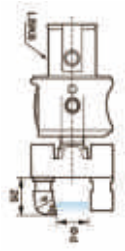	BJ16BE36A	○	0.5–9	WBH2–50LBK6 (1.05Kg)	ST16–SL27–55 (0.20Kg)	BW–M10 (0.02Kg)	M1010–25 (0.02Kg)	BE36A	TP08
	BJ16BE28A	○	9–17					BE28A	
	BJ16BE22A	○	17–23					BE22A	
	BJ16BE18A	○	23–27					BE18A	

1.The maximum,minmum diameter of processing is the use of nose radius R0.2 insert value;
2.Without blade,please order;
3.The processing,the spindle–should be reversed;
4.Please note the eccentric changes when the interference range will also change.

Outside diameter boring series

☐L type Processing range:Φ21~Φ662





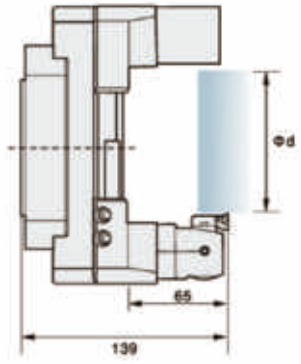

Ordering Code	Stock	dm	L	D	Insert	Boring	Clump weight	Clamp	Screw	Screw	Wrench	Weight
CDH–D8–55–78L	●	32	84	8–55	TP..1103	CKB4–EWN4671	CKB4–PHK	CDH–CKB4	NLJ–M8	M5*13	T20	3
CDH–D30–120–78L	●			30–120								4.8

1.The maximum,minmum diameter of processing is the use of tool nose radius R0.4 insert value;
2.WBH boring head with 1 blade holder(ENF4–1),but not with the blade,please order;
3.The processing,the spindle should be reversed;
4.The use of FL135.FL200 nose direction and drive health direction and plase,when using the FL135/90.FL200/90 tip direction and perpendicular to the direction of transmission key.

●Stock ○Availabie upon Order

WBJ16 Fine-tune Precision Boring Tools

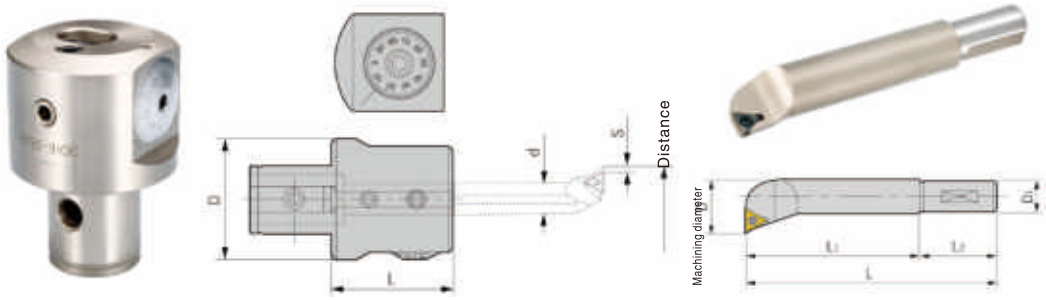

Ordering Code	Stock	Boring Range	D	d	L	Tuning precision	Stroke	Weight(Kg)
WBJ16	●	Φ6-Φ50	63	16	50	Φ0.01mm	6.0mm	1.2

Ordering Code	Stock	Boring Range	D1	L1	L	Applicable Insert	Clamp Screw	Spanner	Weight(Kg)
WBJ-1606-24	○	6-9	16	24	73	WBGT0601...L	M2x4	T6	0.014
WBJ-1608-32	●	8-11		32	80	TBGT0601...L	M2x5		0.077
WBJ-1610-40	●	10-13		40	87				0.082
WBJ-1612-53	●	12-17		53	98	TPGH0902...L	M2.5x6	T8	0.095
WBJ-1616-53	●	16-21		68	110				0.143
WBJ-1620-83	●	20-26		83	125				0.203
WBJ-1625-90	●	25-31		90	128	TPGH1103...L	M3.0x7	T8	0.275
WBJ-1630-90	●	30-42		90	128				0.275
WBJ-1640-90	●	40-50		90	128				0.286

WBJ16 Fine-tune Precision Boring Tools(8PCS)



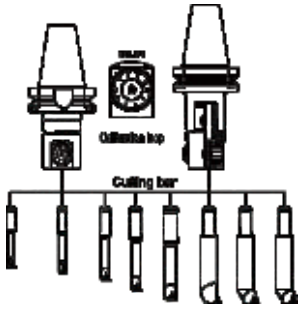

Ordering Code	Stock	Boring Range	Spinde Handle Model	Head NO.	Bar Keep Out	Weight(Kg)
BT40-WBJ16-8P	●	8-50	BT40-LBK6-55	16	WBJ-16..	9.1
BT50-WBJ16-8P	●	8-50	BT50-LBK6-65		WBJ-16..	11.7
NT40-WBJ16-8P	●	8-50	NT40-LBK6-55		WBJ-16..	8.5
NT50-WBJ16-8P	●	8-50	NT50-LBK6-55		WBJ-16..	10.3
SK40-WBJ16-8P	●	8-50	SK40-LBK6-55		WBJ-16..	6.9
SK50-WBJ16-8P	●	8-50	SK50-LBK6-65		WBJ-16..	10.5

●Stock ○Availabie upon Order

Collet for Tungsten Carbide Small Diameter Modular Boring Bar Series Type EC



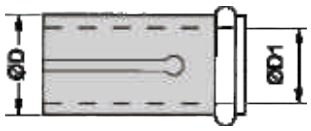

Ordering Code	Stock	D(mm)	d1(mm)	Applicable Carbide Tool Holder
EC1608	○	16	8	ST08.HC08
EC1610	○	16	10	ST10.HC10
EC1612	○	16	12	ST12.HC12
EC1614	○	16	14	St14

Tungsten Carbide Small Diameter Modular Boring Bar,ST Type



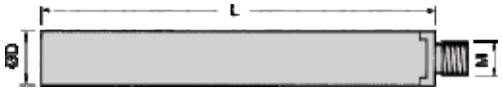

Ordering Code	Stock	L(mm)	D(mm)	M(mm)	Applicable Carbide Tool Holder	Applicable Bushing
ST08-W5-100L	●	100	8	M5	BE09A.BE10.5A	EC1608
ST10-W6-110L	●	110	10	M6	BE12A	EC1610
ST12-W6-120L	●	120	12		BE14A.BE16A	EC1612
ST14-W6-160L	●	160	14		BE16A	EC1614
ST16-W10-160L	●	160	16	M10	BE18A BE20A BE22A BE24A BE26A BE28A BE30A BE32A BE34A BE36A BE38A BE40A	–

Boring Head,BE Type 《Boring RangeΦ9-Φ50mm》

	Ordering Code	Stock	d(mm)	H(mm)	L(mm)	M(mm)	Insert	Clamp Screw	Wrench
	BE09A	●	9	7	18	M5	TP..0802..	M2.2	T7
	BE10.5A	●	10.5						
	BE12A	●	12	8	23	M6			
	BE14A	●	14	10					
	BE16A	●	16						
	BE18A	●	18	14	27	M10			
	BE20A	●	20						
	BE22A	●	22						
	BE24A	●	24						
	BE26A	●	26						
	BE28A	●	28						
	BE30A	●	30						
	BE32A	●	32						
	BE34A	●	34						
	BE36A	●	36						
	BE38A	●	38						
	BE40A	●	40						

●Stock ○Availabie upon Order

NBH2084 Fine-tune Precision Boring Tools



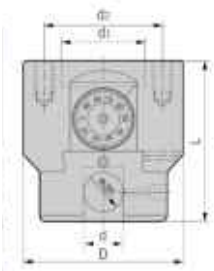

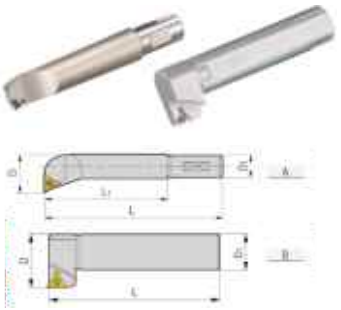

Ordering Code	Stock	D	d	d1	d2	L	Boring Range	Tuning precision	Stroke	Weight(Kg)
NBH2084	●	84	20	35	60	80	Φ8-Φ280	Φ0.01mm	28.0mm	3.0

Ordering Code	Stock	Boring Range	D1	L1	L	Applicable Inserts	Clamp Screw	Spanner	Weight(Kg)
SBJ-2008-32	●	8-11	20	32	80	TBGT0601..L	M2.0x5	T6	0.095
SBJ2010-40	●	10-13		40	87				0.095
SBJ2012-53	●	12-17		53	98	TPGH0902..L	M2.5x6	T8	0.12
SBJ2016-68	●	16-21		68	110				0.16
SBJ2020-83	●	20-130		83	123	TPGH1103..L	M3.0x7	T8	0.22
SBJ2025-96	●	25-135		96	137				0.34
SBJ2030-115	●	30-140		115	152				0.54
SBJ2020-L	●	120-280		84+BTL1	100				0.23

NBH2084 Fine-tune Precision Boring Tools(Set)



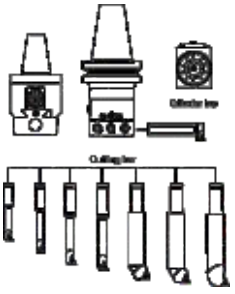

Ordering Code	Stock	Boring Range	Spinde Handle Model	Head NO.	Bar Keep Out	Weight(Kg)
BT40-NBH2084-8P	●	08-280	BT40-NBH-50	NBH2084	SBJ-20..	9.5
BT50-NBH2084-8P	●	08-280	BT50-NBH-55		SBJ-20..	12.0
NT40-NBH2084-8P	●	08-280	NT40-NBH-50		SBJ-20..	9.3
NT50-NBH2084-8P	●	08-280	NT50-NBH-55		SBJ-20..	10.8
SK40-NBH2084-8P	●	08-280	SK40-NBH-50		SBJ-20..	9.5
SK50-NBH2084-8P	●	08-280	SK50-NBH-55		SBJ-20..	12.0
R8-NBH-2084-8P	●	08-280	R8-NBH-50		SBJ-20..	10.0

●Stock ○Availabie upon Order

Super Hard Solid Tungsten Carbide Boring Bar

《Boring Range form Φ20–Φ75mm》

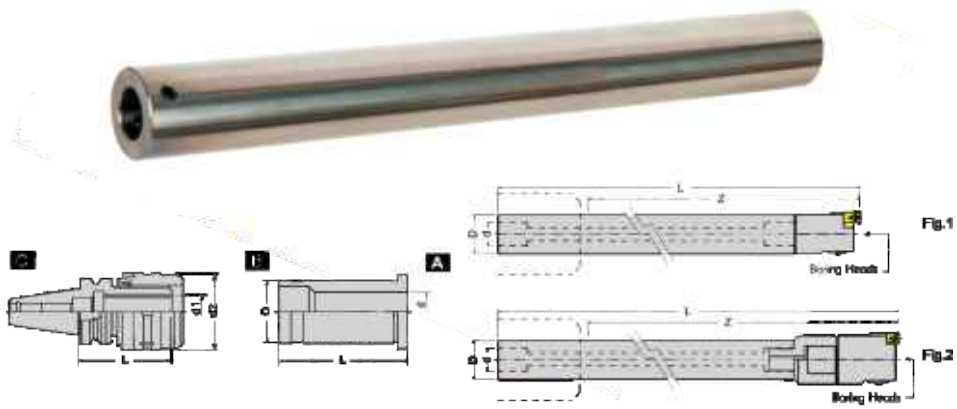

Ordering Code	Stock	Fig	Φdmm Internal Dia.	Dmm External Dia.	L(mm)	Z(mm)	Applicable Boring Heads	Weight (Kg)
SC19–CKB1–150L	●	1	11	19	225	150	CKB1	0.8
SC19–CKB1–200L	●				275	200	CKB1	1
SC24–CKB2–180L	●		14	24	260	180	CKB2	1.45
SC24–CKB2–240L	●				320	240	CKB2	1.8
SC32–CKB3–240L	●		18	32	320	240	CKB3	2.8
SC32–CKB3–310L	●				390	310	CKB3	3.2
SC32–CKB3–280L	●	2	18	32	365	280	CKB3	3.1
SC32–CKB4–280L	●		22	39	365	280	CKB4	3.1
SC32–CKB3–350L	●	2	18	32	435	350	CKB3	3.8
SC32–CKB4–350L	●		22	39	435	350	CKB4	3.8
SC40–CKB4–310L	●	1	22	40	390	310	CKB4	5
SC40–CKB4–400L	●				480	400	CKB4	6.5
SC40–CKB4–360L	●	2	22	40	445	360	CKB4	5.6
SC40–CKB5–360L	●		28	50	445	360	CKB5	5.6
SC40–CKB4–450L	●	2	22	40	535	450	CKB4	7.1
SC40–CKB5–450L	●		28	50	535	450	CKB5	7.1

1.Super hard tungsten carbide boring bar made from high toughness compound is tough and durable,highly materializing features of super hardness,high rigidity and extra vibration reslstance,most suitable or extra depth boring(10D);

2.Standard internal coolant hole is built in everv size of the bar,best for coofing and chip evacuation in deep hole boring;

3.Featuring straight shank structure,the bar can be adjusted to different working lengths;

4.On both ends of main body integrated are soldering holes.One hole will be superseded by the other upon breaking.This will reduce your cost greatly increase the value of boring car.

★Boring head is not included

★CKB3/4 and CKB4/5 are extensions with magnifying diameter

●Stock ○Availabie upon Order

CKB Boring Holder



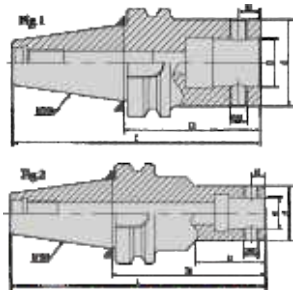

Ordering Code	Stock	Type	L	L2	D	d	D1	G	Weight
BT30-CKB1-80	●	Fig.1	80	46	19	11	31	M4x0.5	0.75
BT30-CKB2-80	●		80	46	24	14	31	M5x0.5	0.83
BT30-CKB3-80	●		80	58	31	18	31	M6x0.75	0.91
BT30-CKB4-80	●		80	58	39	22	39	M8x0.75	1.02
BT40-CKB1-85	●		85	49	19	11	31	M4x0.5	1.18
BT40-CKB1-115	●		115	79	19	11	31	M4x0.5	1.21
BT40-CKB2-85	●		85	49	24	14	31	M5x0.5	1.21
BT40-CKB2-115	●		115	79	24	14	31	M5x0.5	1.27
BT40-CKB3-95	●		95	68	31	18	31	M6x0.75	1.32
BT40-CKB3-125	●		125	80	31	18	37	M6x0.75	1.46
BT40-CKB3-155	●	Fig.2	155	85	31	18	37	M6x0.75	1.62
BT40-CKB4-95	●	Fig.1	95	68	39	22	39	M8x0.75	1.54
BT40-CKB4-125	●		125	98	39	22	39	M8x0.75	1.86
BT40-CKB4-155	●		155	128	39	22	46	M8x0.75	2.15
BT40-CKB4-185	●	Fig.2	185	120	39	22	46	M8x0.75	2.42
BT40-CKB5-95	●	Fig.1	95	68	49	28	49	M10x1	1.81
BT40-CKB5-125	●		125	98	49	28	49	M10x1	2.35
BT40-CKB5-155	●		155	128	49	28	49	M10x1	2.75
BT40-CKB5-185	●		185	155	49	28	49	M10x1	3.05
BT40-CKB6-95	●		95	68	63	36	63	M12x1	2.75
BT40-CKB6-125	●		125	98	63	36	63	M12x1	3.20
BT40-CKB6-155	●		155	128	63	36	63	M12x1	3.40
BT40-CKB6-185	●		185	158	63	36	63	M12x1	3.60
BT50-CKB1-110	●		110	67	19	11	27	M4x0.5	3.93
BT50-CKB1-145	●	Fig.2	145	75	19	11	27	M4x0.5	4.05
BT50-CKB2-110	●	Fig.1	110	67	24	14	31	M5x0.5	4.08
BT50-CKB2-145	●	Fig.2	145	75	24	14	35	M5x0.5	4.20
BT50-CKB3-125	●	Fig.1	125	75	31	18	36	M6x0.75	4.10
BT50-CKB3-165	●	Fig.2	165	90	31	18	36	M6x0.75	4.35
BT50-CKB4-125	●	Fig.1	125	82	39	22	45	M8x0.75	4.35
BT50-CKB4-165	●		165	95	39	22	45	M8x0.75	4.70
BT50-CKB4-205	●	Fig.2	205	110	39	22	45	M8x0.75	5.02
BT50-CKB5-125	●	Fig.1	125	82	49	28	49	M10x1	4.75
BT50-CKB5-165	●		165	95	49	28	58	M10x1	5.20
BT50-CKB5-205	●	Fig.2	205	110	49	28	58	M10x1	5.53
BT50-CKB5-245	●		245	150	49	28	58	M10x1	5.95
BT50-CKB6-125	●	Fig.1	125	87	63	36	73	M12x1	5.15
BT50-CKB6-165	●		165	127	63	36	73	M12x1	6.10
BT50-CKB6-205	●	Fig.2	205	165	63	36	73	M12x1	7.40
BT50-CKB6-245	●		245	150	63	36	73	M12x1	7.75
BT50-CKB6-285	●		285	185	63	36	73	M12x1	8.10

●Stock ○Availabie upon Order

Extenstion(Constant Diameter)



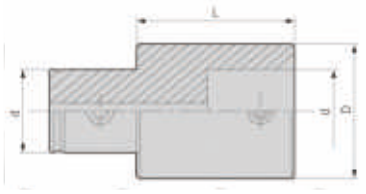

Ordering Code	Stock	d (mm)	D (mm)	L (mm)	Applicable Boring Heads	Weight (Kg)
CKB1-1-30L	●	11	19	30	CKB1	0.07
CKB2-2-30L	●	14	24	30	CKB2	0.1
CKB3-3-30L	●	18	31	30	CKB3	0.15
CKB4-4-45L	●	22	39	45	CKB4	0.4
CKB5-5-60L	●	28	50	60	CKB5	0.8
CKB6-6-60L	●	36	64	60	CKB6	1.4

Extenstion(Reducing)



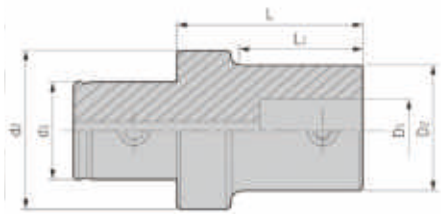

Ordering Code	Stock	d1 (mm)	d2 (mm)	D1 (mm)	D2 (mm)	L (mm)	L1 (mm)	Applicable Boring Heads	Weight (Kg)
CKB2-1-36L	●	14	24	14	24	36	30	CKB2/CKB1	0.1
CKB3-1-41L	●	18	31	14	24	41	30	CKB3/CKB1	0.15
CKB3-2-37L	●			11	19	37	25	CKB3/CKB2	0.15
CKB4-1-58L	●	22	39	14	24	58	40	CKB4/CKB1	0.3
CKB4-2-50L	●			18	31	50	36	CKB4/CKB2	0.3
CKB4-3-50L	●			22	39	50	37	CKB4/CKB3	0.35
CKB5-1-60L	●	28	50	11	19	60	40	CKB5/CKB1	0.45
CKB5-2-54L	●			14	24	54	35	CKB5/CKB2	0.45
CKB5-2-74L	●			14	24	74	55	CKB5/CKB2	0.5
CKB5-3-47L	●			18	31	47	29	CKB5/CKB3	0.5
CKB5-3-72L	●			18	31	72	54	CKB5/CKB3	0.6
CKB5-4-42L	●			22	39	42	25	CKB5/CKB4	0.5
CKB5-4-67L	●			22	39	67	50	CKB5/CKB4	0.7
CKB6-1-70L	●	36	64	11	19	70	40	CKB6/CKB1	0.9
CKB6-2-63L	●			14	24	63	45	CKB6/CKB2	0.7
CKB6-2-93L	●			14	24	93	75	CKB6/CKB2	0.8
CKB6-3-56L	●			18	31	56	39	CKB6/CKB3	0.75
CKB6-3-96L	●			18	31	96	79	CKB6/CKB3	0.95
CKB6-4-51L	●			22	39	51	35	CKB6/CKB4	0.85
CKB6-4-101L	●			22	39	101	85	CKB6/CKB4	1.3
CKB6-5-41L	●			36	64	41	25	CKB6/CKB5	0.85
CKB6-5-91L	●			36	64	91	75	CKB6/CKB5	1.45

●Stock ○Availabie upon Order

Large Size Boring Bar BT NO–DM–L1

◎BT NO taper shank executives At3 standard;
◎Tolerance for D inner bore;
◎Entire center cooling is good for throuth coolant and antivibration.



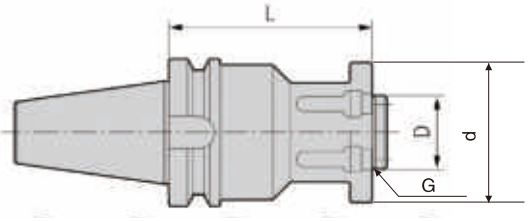

Ordering Code	Stock	L	D	d	G	Weight
BT40–DM32–60	●	60	100	32	4–M12	2.42
BT50–DM32–100	●	100	100	32	4–M12	6.3
BT50–DM32–150	●	150	100	32	4–M12	9.2
BT50–DM32–200	●	200	100	32	4–M12	11.1
BT50–DM32–250	●	250	100	32	4–M12	12.9
BT50–DM32–300	●	300	100	32	4–M12	14.8

●Stock ○Availabie upon Order

TWN Twin–bit Rough Boring Head Operating Guide Line

1. Boring body
2. Insert holder
3. Insert screw
4. Insert
5. Locking screw
6. Adjusting screw

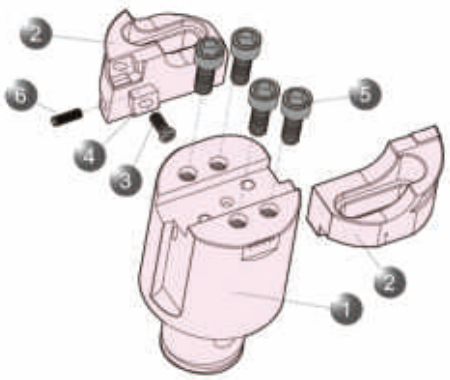

Step 1:Clockwise (Locking)
Step 3:Anticlockwise (Loosening)
Step 2
Step 4

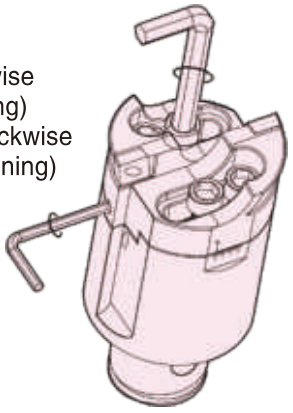

Sequence Of Use

Please operate the following step(1–6)according to the diagram figured:
Step1.Loosening the fixed screws on the blade bearing.
Step2.Rotating and adjusting the side screws to move the blade bearing to an scheduled processing dimension.
Step3.Locking the fixed screws on the blade bearing.
Step4.Using proper force to rotate and adjust the screws to avoid the screw loose during cutting.

EWN16 Fine–tune Precision Boring Operating manual

1. CBH adapter
2. Micro adjusting knob
3. CBH body
4. Insert holder
5. Locking screw
6. Oil hole

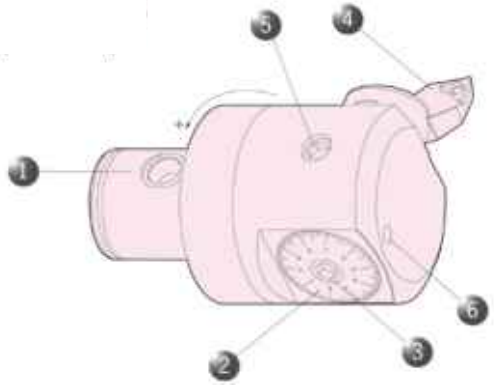

Sequence Of Use

Please operate the following step(1–5)according to the diagram figured:
Step1.Loosening the locking screws.
Step2.Rotating tune knob by clockwise to increase the processing diameter,the graduate is Φ0.01mm.
Step3.Rotating by anti–clockwise will decrease the processing diameter.
Step4.When adjusting the size of processing,please fine–tuning by the direction to ensure mirco adjustment precision.
Step5.When meet the demanded size,please use proper force to lock the fasten screws.

WBJ16 Fine–tune Precision Boring Operating manual

1. DBJ16 adapter
2. Micro adjusting knob
3. Insert
4. DBJ16 body
5. Locking screw

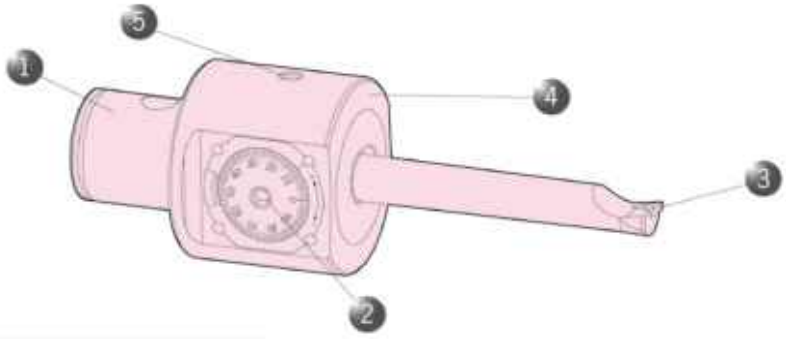

Sequence Of Use

Please operate the following step(1–6)according to the diagram figured:
Step1.Using special wrench to lock two M10 screws to fasten the cutting tools in the processing size range.
Step2.Loosening the fixed screws.
Step3.Rotating tune knob by clockwise to increase the processing diameter,the graduate is Φ0.01mm.
Step4.Rotating by anti–clockwise will decrease the processing diameter.
Step5.When adjusting the size of processing,please fine–tuning by the same dircetion to ensure mirco adjustment precision.
Step6.When meet the demanded size,please use the proper force to lock the spindle orientation to makespindle fix into the substance.

SPMG2D Fast Drilling(U Drill)



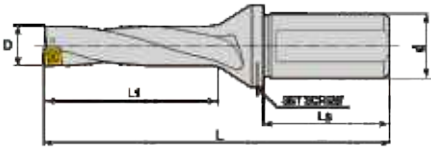

Ordering Code	Stock	D (mm)	L1 (mm)	L (mm)	d (mm)	LS (mm)	Insert	Screw	Wrench
C20-2D13-29SP05	●	13	29	88	20	50	SPMG050204	M2	T6
C20-2D13.5-30SP05	●	13.5	30	89					
C20-2D14-31SP05	●	14	31	90					
C20-2D14.5-32SP05	●	14.5	32	91					
C20-2D15-33SP05	●	15	33	92					
C20-2D15.5-34SP06	●	15.5	34	93			SPMG060204	M2.2	T6
C20-2D16-35SP06	●	16	35	94					
C20-2D16.5-36SP06	●	16.5	36	95					
C25-2D17-37SP06	●	17	37	108	25	56			
C25-3D17.5-38SP06	●	17.5	38	109					
C25-2D18-39SP06	●	18	39	110					
C25-2D18.5-40SP06	●	18.5	40	111					
C25-2D19-41SP06	●	19	41	112					
C25-2D19.5-42SP06	●	19.5	42	113					
C25-2D20-43SP06	●	20	43	114					
C25-2D20.5-44SP06	●	20.5	44	115					
C25-2D21-45SP06	●	21	45	116					
C25-2D21.5-46SP06	●	21.5	46	117					
C25-2D22-47SP07	●	22	47	118			SPMG07T38	M2.5	T8
C25-2D22.5-48SP07	●	22.5	48	119					
C25-2D23-49SP07	●	23	49	123					
C25-2D23.5-50SP07	●	23.5	50	124					
C25-2D24-51SP07	●	24	51	125					
C25-2D24.5-52SP07	●	24.5	52	126	32	60			
C25-2D25-53SP07	●	25	53	127					
C32-2D25.5-54SP07	●	25.5	54	134					
C32-2D26-55SP07	●	26	55	135					
C32-2D26.5-56SP07	●	26.5	56	136					
C32-2D27-57SP07	●	27	57	137					
C32-2D27.5-58SP07	●	27.5	58	138					
C32-2D28-59SP09	●	28	59	139			SPMG090408	M3.5	T15
C32-2D28.5-60SP09	●	28.5	60	140					
C32-2D29-62SP09	●	29	62	143					
C32-2D29.5-63SP09	●	29.5	63	144					
C32-2D30-64SP09	●	30	64	148					
C32-2D31-66SP09	●	31	66	150					
C32-2D32-68SP09	●	32	68	152					
C32-2D33-70SP09	●	33	70	154					
C32-2D34-72SP11	●	34	72	156			SPMG110408	M4M	T15
C32-2D35-74SP11	●	35	74	158					
C32-2D36-76SP11	●	36	76	160					
C32-2D37-79SP11	●	37	79	169					
C32-2D38-81SP11	●	38	91	171					
C40-2D39-83SP11	●	39	83	183	40	70			
C40-2D40-85SP11	●	40	85	185					
C40-2D41-87SP11	●	41	87	187					
C40-2D42-89SP14	●	42	89	189			SPMG140512	M5	T20
C40-2D43-91SP14	●	43	91	191					
C40-2D44-93SP14	●	44	93	193					
C40-2D45-95SP14	●	45	95	195					
C40-2D46-97SP14	●	46	97	197					
C40-2D47-99SP14	●	47	99	199					
C40-2D48-101SP14	●	48	101	201					
C40-2D49-103SP14	●	49	103	203					
C40-2D50-105SP14	●	50	105	205					

●Stock ○Availabie upon Order

SPMG3D Fast Drilling(U Drill)



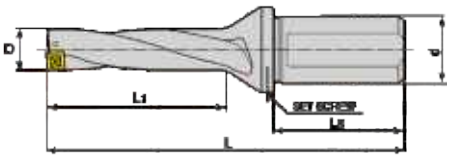

Ordering Code	Stock	D (mm)	L1 (mm)	L (mm)	d (mm)	LS (mm)	Insert	Screw	Wrench
C20-3D13-42SP05	●	13	42	101	20	50	SPMG050204	M2	T6
C20-3D13.5-44SP05	●	13.5	44	103					
C20-3D14-45SP05	●	14	45	104					
C20-3D14.5-47SP05	●	14.5	47	106					
C20-3D15-48SP05	●	15	48	107					
C20-3D15.5-50SP06	●	15.5	50	109			SPMG060204	M2.2	T6
C20-3D16-51SP06	●	16	51	110					
C20-3D16.5-53SP06	●	16.5	53	112					
C25-3D17-54SP06	●	17	54	125	25	56			
C25-3D17.5-56SP06	●	17.5	56	127					
C25-3D18-57SP06	●	18	57	128					
C25-3D18.5-59SP06	●	18.5	59	130					
C25-3D19-60SP06	●	19	60	131					
C25-3D19.5-62SP06	●	19.5	62	133					
C25-3D20-63SP06	●	20	63	134					
C25-3D20.5-65SP06	●	20.5	65	136					
C25-3D21-66SP06	●	21	66	137					
C25-3D21.5-68SP06	●	21.5	68	139					
C25-3D22-69SP07	●	22	69	140			SPMG07T38	M2.5	T8
C25-3D22.5-71SP07	●	22.5	71	142					
C25-3D23-72SP07	●	23	72	146					
C25-3D23.5-74SP07	●	23.5	74	148					
C25-3D24-75SP07	●	24	75	149					
C25-3D24.5-77SP07	●	24.5	77	151					
C25-3D25-78SP07	●	25	78	152					
C32-3D25.5-80SP07	●	25.5	80	160	32	60			
C32-3D26-81SP07	●	26	81	161					
C32-3D26.5-83SP07	●	26.5	83	163					
C32-3D27-84SP07	●	27	84	164					
C32-3D27.5-86SP07	●	27.5	86	166					
C32-3D28-87SP09	●	28	87	167			SPMG090408	M3.5	T15
C32-3D28.5-89SP09	●	28.5	89	169					
C32-3D29-91SP09	●	29	91	172					
C32-3D29.5-93SP09	●	29.5	93	174					
C32-3D30-94SP09	●	30	94	178					
C32-3D31-97SP09	●	31	97	181					
C32-3D32-100SP09	●	32	100	184					
C32-3D33-103SP09	●	33	103	187					
C32-3D34-106SP11	●	34	106	190			SPMG110408	M4	T15
C32-3D35-109SP11	●	35	109	193					
C32-3D36-112SP11	●	36	112	196					
C32-3D37-116SP11	●	37	116	206					
C32-3D38-119SP11	●	38	119	207					
C40-3D39-122SP11	●	39	122	222	40	70			
C40-3D40-125SP11	●	40	125	225					
C40-3D41-128SP11	●	41	128	228					
C40-3D42-131SP14	●	42	131	231			SPMG140512	M5	T20
C40-3D43-134SP14	●	43	134	234					
C40-3D44-137SP14	●	44	137	237					
C40-3D45-140SP14	●	45	140	240					
C40-3D46-143SP14	●	46	143	243					
C40-3D47-146SP14	●	47	146	246					
C40-3D48-149SP14	●	48	149	249					
C40-3D49-152SP14	●	49	152	252					
C40-3D50-155SP14	●	50	155	255					

●Stock ○Availabie upon Order

SPMG4D Fast Drilling(U Drill)



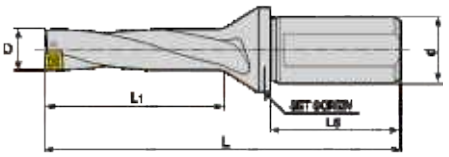

Ordering Code	Stock	D (mm)	L1 (mm)	L (mm)	d (mm)	LS (mm)	Insert	Screw	Wrench
C20-4D13-55SP05	●	13	55	114	20	50	SPMG050204	M2	T6
C20-4D13.5-57SP05	●	13.5	57	116					
C20-4D14-59SP05	●	14	59	118					
C20-4D14.5-61SP05	●	14.5	61	120					
C20-4D15-63SP05	●	15	63	122					
C20-4D15.5-65SP06	●	15.5	65	124			SPMG060204	M2.2	T6
C20-4D16-67SP06	●	16	67	126					
C20-4D16.5-69SP06	●	16.5	69	128					
C25-4D17-71SP06	●	17	71	142	25	56			
C25-4D17.5-73SP06	●	17.5	73	144					
C25-4D18-75SP06	●	18	75	146					
C25-4D18.5-77SP06	●	18.5	77	148					
C25-4D19-79SP06	●	19	79	150					
C25-4D19.5-81SP06	●	19.5	81	152					
C25-4D20-83SP06	●	20	83	154					
C25-4D20.5-85SP06	●	20.5	85	156					
C25-4D21-87SP06	●	21	87	158					
C25-4D21.5-89SP06	●	21.5	89	160					
C25-3D22-91SP07	●	22	91	162			SPMG07T38	M2.5	T8
C25-4D22.5-93SP07	●	22.5	93	164					
C25-4D23-95SP07	●	23	95	169					
C25-4D23.5-97SP07	●	23.5	97	171					
C25-4D24-99SP07	●	24	99	173					
C25-4D24.5-101SP07	●	24.5	101	175					
C25-4D25-103SP07	●	25	103	177					
C32-4D25.5-105SP07	●	25.5	105	185	32	60			
C32-4D26-107SP07	●	26	107	187					
C32-4D26.5-109SP07	●	26.5	109	189					
C32-4D27-111SP07	●	27	111	191					
C32-4D27.5-113SP07	●	27.5	113	193					
C32-4D28-115SP09	●	28	115	195			SPMG090408	M3.5	T15
C32-4D28.5-117SP09	●	28.5	117	197					
C32-4D29-120SP09	●	29	120	201					
C32-4D29.5-122SP09	●	29.5	122	203					
C32-4D30-124SP09	●	30	124	208					
C32-4D31-128SP09	●	31	128	212					
C32-4D32-132SP09	●	32	132	216					
C32-4D33-136SP09	●	33	136	220					
C32-4D34-140SP11	●	34	140	224			SPMG110408	M4M	T15
C32-4D35-144SP11	●	35	144	228					
C32-4D36-148SP11	●	36	148	232					
C32-4D37-153SP11	●	37	153	243					
C32-4D38-157SP11	●	38	157	247					
C40-4D39-161SP11	●	39	161	261	40	70			
C40-4D40-165SP11	●	40	165	265					
C40-4D41-169SP11	●	41	169	269					
C40-4D42-173SP14	●	42	173	273			SPMG140512	M5	T20
C40-4D43-177SP14	●	43	177	277					
C40-4D44-181SP14	●	44	181	281					
C40-4D45-185SP14	●	45	185	285					
C40-4D46-189SP14	●	46	189	289					
C40-4D47-193SP14	●	47	193	293					
C40-4D48-197SP14	●	48	197	297					
C40-4D49-201SP14	●	49	201	301					
C40-4D50-205SP14	●	50	205	305					

●Stock ○Availabie upon Order

WCMX2D Fast Drilling(U Drill)



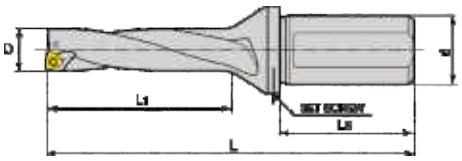

Ordering Code	Stock	D (mm)	L1 (mm)	L (mm)	DS (mm)	LS (mm)	Insert	Screw	Wrench
C20–2D15–33WC03	●	15	33	104	20	50	WCMX030208	M2.5	T8
C20–2D15.5–34WC03	●	15.5	34	105					
C20–2D16–35WC03	●	16	35	106					
C20–2D16.5–36WC03	●	16.5	36	107					
C25–2D17–37WC03	●	17	37	108	25	56			
C25–2D17.5–38WC03	●	17.5	38	109					
C25–2D18–39WC03	●	18	39	110					
C25–2D18.5–40WC03	●	18.5	40	111					
C25–2D19–41WC03	●	19	41	112					
C25–2D19.5–42WC03	●	19.5	42	113					
C25–2D20–43WC03	●	20	43	114					
C25–2D20.5–44WC03	●	20.5	44	115					
C25–2D21–45WC04	●	21	45	116			WCMX040208	M2.5	T8
C25–2D21.5–46WC04	●	21.5	46	117					
C25–2D22–47WC04	●	22	47	118					
C25–2D22.5–48WC04	●	22.5	48	119					
C25–2D23–49WC04	●	23	49	123					
C25–2D23.5–50WC04	●	23.5	50	124					
C25–2D24–51WC04	●	24	51	125					
C25–2D24.5–52WC04	●	24.5	52	126					
C25–2D25–53WC05	●	25	53	127			WCMX050308	M3	T8
C32–2D25.5–54WC05	●	25.5	54	134	32	60			
C32–2D26–55WC05	●	26	55	135					
C32–2D26.5–56WC05	●	26.5	56	136					
C32–2D27–57WC05	●	27	57	137					
C32–2D28–59WC05	●	28	59	139					
C32–2D29–62WC05	●	29	61	143					
C32–2D30–64WC05	●	30	64	148					
C32–2D31–66WC06	●	31	66	150			WCMX06T308	M3.5	T15
C32–2D32–68WC06	●	32	68	152					
C32–2D33–70WC06	●	33	70	154					
C32–2D34–72WC06	●	34	72	156					
C32–2D35–74WC06	●	35	74	158					
C32–2D36–76WC06	●	36	76	160					
C32–2D37–79WC06	●	37	79	169					
C32–2D38–81WC06	●	38	81	171					
C40–2D39–83WC06	●	39	83	183	40	70			
C40–2D40–85WC06	●	40	85	185					
C40–2D41–87WC06	●	41	87	187					
C40–2D42–89WC06	●	42	89	189					
C40–2D43–91WC06	●	43	91	191					
C40–2D44–93WC06	●	44	93	193					
C40–2D45–95WC06	●	45	95	195					
C40–2D46–97WC06	●	46	97	197					
C40–2D47–99WC06	●	47	99	199					
C40–2D48–101WC08	●	48	101	201			WCMX080412	M4	T15
C40–2D49–103WC08	●	49	103	203					
C40–2D50–105WC08	●	50	105	205					
C40–2D51–107WC08	●	51	107	207					
C40–2D52–109WC08	●	52	109	209					
C40–2D53–111WC08	●	53	111	211					
C40–2D54–113WC08	●	54	113	213					
C40–2D55–115WC08	●	55	115	215					
C40–2D56–120WC08	●	56	120	222					
C40–2D57–122WC08	●	57	122	224					
C40–2D58–124WC08	●	58	124	226					
C40–2D59–126WC08	●	59	126	228					
C40–2D60–128WC08	●	60	128	230					

●Stock ○Availabie upon Order

WCMX3D Fast Drilling(U Drill)



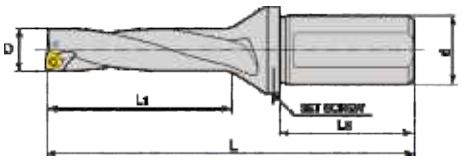

Ordering Code	Stock	D (mm)	L1 (mm)	L (mm)	DS (mm)	LS (mm)	Insert	Screw	Wrench
C20–3D15–48WC03	●	15	48	119	20	50	WCMX030208	M2.5	T8
C20–3D15.5–50WC03	●	15.5	50	121					
C20–3D16–51WC03	●	16	51	122					
C20–3D16.5–53WC03	●	16.5	53	124					
C25–3D17–54WC03	●	17	54	125	25	56			
C25–3D17.5–56WC03	●	17.5	56	127					
C25–3D18–57WC03	●	18	57	128					
C25–3D18.5–59WC03	●	18.5	59	130					
C25–3D19–60WC03	●	19	60	131					
C25–3D19.5–62WC03	●	19.5	62	133					
C25–3D20–63WC03	●	20	63	134					
C25–3D20.5–65WC03	●	20.5	65	136					
C25–3D21–66WC04	●	21	66	137			WCMX040208	M2.5	T8
C25–3D21.5–68WC04	●	21.5	68	139					
C25–3D22–69WC04	●	22	69	140					
C25–3D22.5–71WC04	●	22.5	71	142					
C25–3D23–72WC04	●	23	72	146					
C25–3D23.5–74WC04	●	23.5	74	148					
C25–3D24–75WC04	●	24	75	149					
C25–3D24.5–77WC04	●	24.5	77	151					
C25–3D25–78WC05	●	25	78	152			WCMX050308	M3	T8
C32–3D25.5–80WC05	●	25.5	80	160	32	60			
C32–3D26–81WC05	●	26	81	161					
C32–3D26.5–83WC05	●	26.5	83	163					
C32–3D27–84WC05	●	27	84	164					
C32–3D28–87WC05	●	28	87	167					
C32–3D29–91WC05	●	29	91	172					
C32–3D30–94WC05	●	30	94	178					
C32–3D31–97WC06	●	31	97	181			WCMX06T308	M3.5	T15
C32–3D32–100WC06	●	32	100	184					
C32–3D33–103WC06	●	33	103	187					
C32–3D34–106WC06	●	34	106	190					
C32–3D35–109WC06	●	35	109	193					
C32–3D36–112WC06	●	36	112	196					
C32–3D37–116WC06	●	37	116	206					
C32–3D38–119WC06	●	38	119	209					
C40–3D39–122WC06	●	39	122	222	40	70			
C40–3D40–125WC06	●	40	125	225					
C40–3D41–128WC06	●	41	128	228					
C40–3D42–131WC06	●	42	131	231					
C40–3D43–134WC06	●	43	134	234					
C40–3D44–137WC06	●	44	137	237					
C40–3D45–140WC06	●	45	140	240					
C40–3D46–143WC06	●	46	143	243					
C40–3D47–146WC06	●	47	146	246					
C40–3D48–149WC08	●	48	149	249			WCMX080412	M4	T15
C40–3D49–152WC08	●	49	152	252					
C40–3D50–155WC08	●	50	155	255					
C40–3D51–158WC08	●	51	158	258					
C40–3D52–161WC08	●	52	161	261					
C40–3D53–164WC08	●	53	164	264					
C40–3D54–167WC08	●	54	167	267					
C40–3D55–170WC08	●	55	170	270					
C40–3D56–176WC08	●	56	176	278					
C40–3D57–179WC08	●	57	179	281					
C40–3D58–182WC08	●	58	182	284					
C40–3D59–185WC08	●	59	185	287					
C40–3D60–188WC08	●	60	188	290					

●Stock ○Availabie upon Order

WCMX4D Fast Drilling(U Drill)



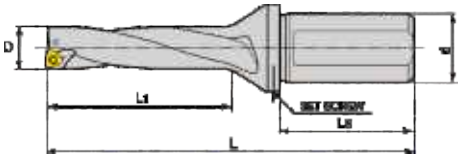

Ordering Code	Stock	D (mm)	L1 (mm)	L (mm)	DS (mm)	LS (mm)	Insert	Screw	Wrench
C20–4D15–63WC03	●	15	63	134	20	50	WCMX030208	M2.5	T8
C20–4D15.5–65WC03	●	15.5	65	136					
C20–4D16–67WC03	●	16	67	138					
C20–4D16.5–69WC03	●	16.5	69	140					
C25–4D17–71WC03	●	17	71	142	25	56			
C25–4D17.5–73WC03	●	17.5	73	144					
C25–4D18–75WC03	●	18	75	146					
C25–4D18.5–77WC03	●	18.5	77	148					
C25–4D19–79WC03	●	19	79	150					
C25–4D19.5–81WC03	●	19.5	81	152					
C25–4D20–83WC03	●	20	83	156					
C25–4D20.5–85WC03	●	20.5	85	158					
C25–4D21–87WC04	●	21	87	160			WCMX040208	M2.5	T8
C25–4D21.5–89WC04	●	21.5	89	162					
C25–4D22–91WC04	●	22	91	164					
C25–4D22.5–93WC04	●	22.5	93	179					
C25–4D23–95WC04	●	23	95	171					
C25–4D23.5–97WC04	●	23.5	97	173					
C25–4D24–99WC04	●	24	99	175					
C25–4D24.5–101WC04	●	24.5	101	177					
C25–4D25–103WC05	●	25	103	185			WCMX050308	M3	T8
C32–4D25.5–105WC05	●	25.5	105	187	32	60			
C32–4D26–107WC05	●	26	107	189					
C32–4D26.5–109WC05	●	26.5	109	191					
C32–4D27–111WC05	●	27	111	193					
C32–4D28–115WC05	●	28	115	195					
C32–4D29–120WC05	●	29	120	201					
C32–4D30–124WC05	●	30	124	208					
C32–4D31–128WC06	●	31	128	212			WCMX06T308	M3.5	T15
C32–4D32–132WC06	●	32	132	216					
C32–4D33–136WC06	●	33	136	220					
C32–4D34–140WC06	●	34	140	224					
C32–4D35–144WC06	●	35	144	228					
C32–4D36–148WC06	●	36	148	232					
C32–4D37–153WC06	●	37	153	243					
C32–4D38–157WC06	●	38	157	247					
C40–4D39–161WC06	●	39	161	261	40	70			
C40–4D40–165WC06	●	40	165	265					
C40–4D41–169WC06	●	41	169	269					
C40–4D42–173WC06	●	42	173	273					
C40–4D43–177WC06	●	43	177	277					
C40–4D44–181WC06	●	44	181	281					
C40–4D45–185WC06	●	45	185	285					
C40–4D46–189WC06	●	46	189	289					
C40–4D47–193WC06	●	47	193	293					
C40–4D48–197WC08	●	48	197	297			WCMX080412	M4	T15
C40–4D49–201WC08	●	49	201	301					
C40–4D50–205WC08	●	50	205	305					
C40–4D51–209WC08	●	51	209	309					
C40–4D52–213WC08	●	52	213	313					
C40–4D53–217WC08	●	53	217	317					
C40–4D54–221WC08	●	54	221	321					
C40–4D55–225WC08	●	55	225	325					
C40–4D56–232WC08	●	56	232	334					
C40–4D57–236WC08	●	57	236	338					
C40–4D58–240WC08	●	58	240	342					
C40–4D59–244WC08	●	59	244	346					
C40–4D60–248WC08	●	60	248	350					

●Stock ○Availabie upon Order

SPMT–NM Drilling Inserts



The material

M P

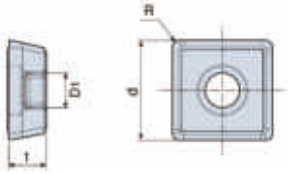

Ordering Code	NS4125	d(mm)	t(mm)	R(mm)	D1(mm)
SPMT 050204 NM	●	5.00	2.38	0.4	2.25
SPMT 060204 NM	●	6.00	2.38	0.4	2.61
SPMT 07T308 NM	●	7.94	3.97	0.8	2.85
SPMT 090408 NM	●	9.80	4.30	0.8	4.05
SPMT 110408 NM	●	11.50	4.80	0.8	4.45
SPMT 120408 NM	●	12.70	4.76	0.8	4.37
SPMT 140512 NM	●	14.30	5.20	1.2	5.75

SPMG–NL Drilling Inserts



The material

N

●N9115
○N9225

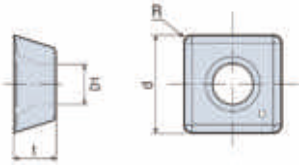

Ordering Code	NN9125	d(mm)	t(mm)	R(mm)	D1(mm)
SPMG 050204 NL	○	5.00	2.38	0.4	2.25
SPMG 060204 NL	○	6.00	2.38	0.4	2.61
SPMG 07T308 NL	○	7.94	3.97	0.8	2.85
SPMG 090408 NL	○	9.80	4.30	0.8	4.05
SPMG 110408 NL	○	11.50	4.80	0.8	4.45
SPMG 140512 NL	○	14.30	5.20	1.2	5.75

WCMX–NM Drilling Inserts



The material

M P

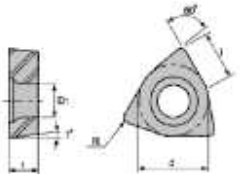

Ordering Code	NS4125	d(mm)	t(mm)	R(mm)	D1(mm)	l(mm)
WCMX 030204–NM	●	5.56	2.38	0.4	2.55	3.8
WCMX 040204–NM	●	6.35	2.38	0.4	2.8	4.3
WCMX 050308–NM	●	7.94	3.18	0.8	3.4	5.4
WCMX 06T308–NM	●	9.52	3.97	0.8	4.4	6.5
WCMX 080412–NM	●	12.70	4.76	1.2	5.5	8.7

●Stock ○Availabie upon Order

Eccentric Sleeve



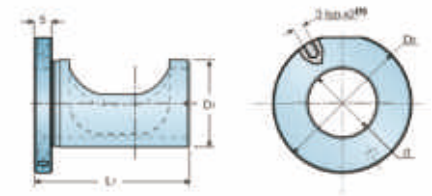

Ordering Code	Stock	d(mm)	D1(mm)	R(mm)	D2(mm)
PXTD 20x25	●	20	25	50	88
PXTD 25x32	●	25	32	50	94
PXTD 32x40	●	32	45	60	152
PXTD 40x50	●	40	50	60	157

Milling Application

When milling machine processing,such as the diameter of the need to change the normal processing diameter, adjustable axial location of eccentric sleeve.

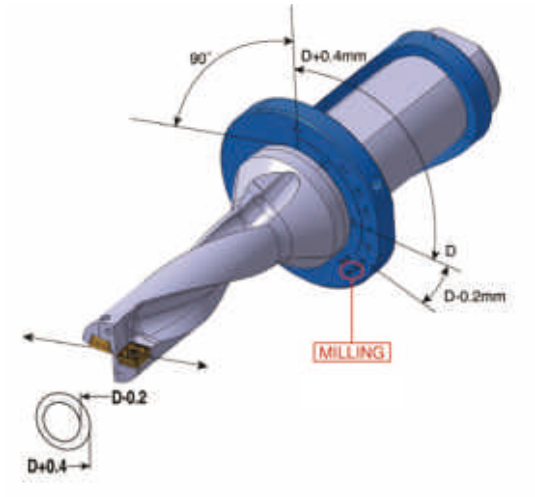

If want to enlarge the aperture,clockwise rotating sleeve;
If want to reduce the aperture,the socket counterclockwise,specific as follows;
Bit diameter:30mm



Lathe Application

Axial and eccentric sleeve can drill spindle axial overlap in the range of 0.2mm (the eccentric sleeve counterclockwise to increase the aperture adjustment)

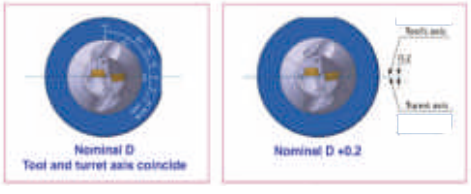

When used in lathe processing,eccentric sleeve bit adjustable axial with spindle axial position

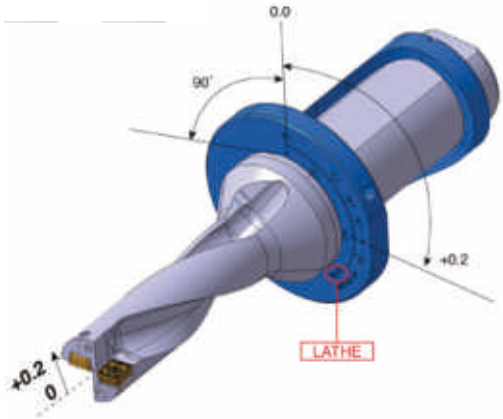

Lathe application technical information

Bit installation and test

First hole drilling processing–first 3mm–6mm depth when the blade,detecting core diameter range should be 0.2mm to 0.7mm

If you do not produce core diameter:

–blade and vibration drilling processing will produce crack

–please rotating drill shank of 180 degrees and then to test

If you core diameter size beyond the recommended data:

–please adjust offset the core diameter control in the recommended range

–otherwise the drilling process will cause overload and vibration

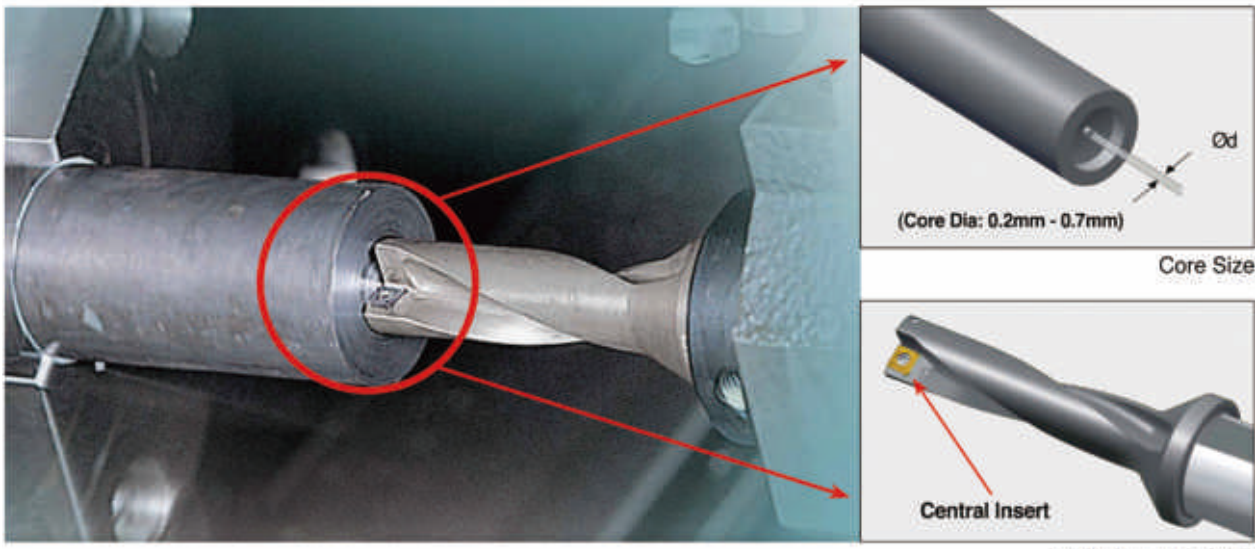

Initial set up of T-Drill

Cutting parameter for fast drill

Material	Carbon steel S50C,Q235		Alloy steel 25–35HRC 4Cr5MoSiV1,Cr12		Stainless steel SUS304,316,OCr19Ni9		Cast iron HT250,QT450		Aluminium alloy	
Speed / Dc	Vc=m/min	f=mm/rev	Vc=m/min	f=mm/rev	Vc=m/min	f=mm/rev	Vc=m/min	f=mm/rev	Vc=m/min	f=mm/rev
12.5–15	160–250	0.05–0.12	120–180	0.06–0.12	150–200	0.05–0.10	150–250	0.06–0.12	250–350	0.06–0.12
16–21		0.06–0.15		0.08–0.15		0.06–0.12		0.08–0.15		0.08–0.15
22–28		0.06–0.18		0.10–0.20		0.08–0.15		0.10–0.20		0.10–0.20
29–33		0.07–0.20		0.12–0.25		0.09–0.16		0.12–0.25		0.12–0.20
34–41		0.08–0.25		0.12–0.25		0.10–0.18		0.15–0.25		0.12–0.25
42–50		0.08–0.25		0.12–0.25		0.10–0.20		0.18–0.30		0.12–0.25
51–60		0.06–0.15		0.08–0.15		0.06–0.12		0.10–0.20		0.12–0.25

Non standard size

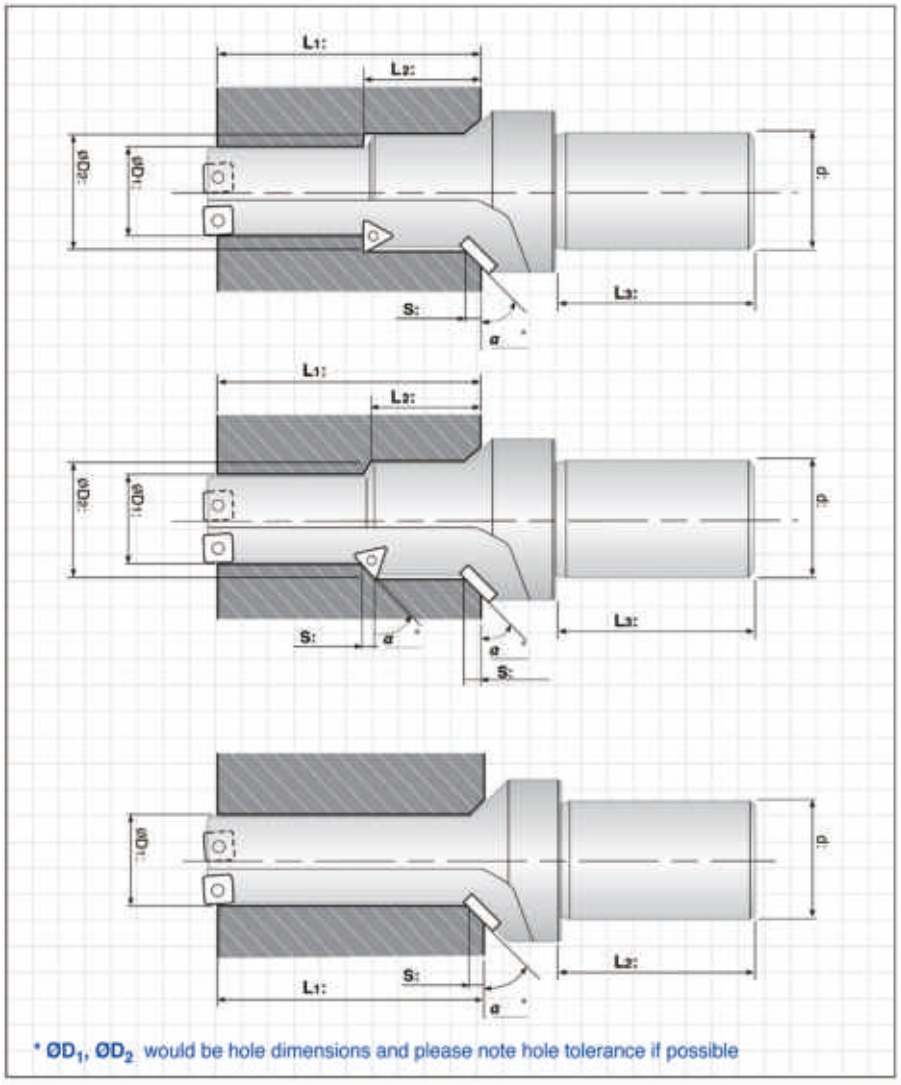

Shank type

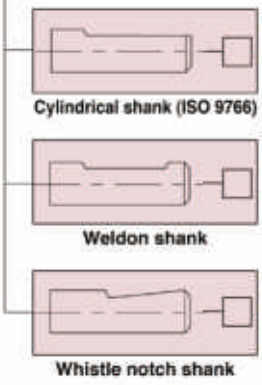

Coolant supply

- Internal ☐
- External ☐

Machine Type

- Horizontal ☐
- Vertical ☐

Hole Type

- Blind hole ☐
- Through hole ☐

Workpieces

- Part: _____
- Material: _____
- Hardness: _____

Quantity

- _____ pcs

Comment

■ Customer : _____ ■ Contact : _____

■ Address: _____

■ Telephone: _____ ■ Fax: _____

■ E-mail: _____