NiceCutt

可换头抗震阻尼刀杆

Interchangeable Anti-Vibration Damped Tool Holder



www.nicecutt.com

manager@nicecutt.com

NiceCutt

外圆车刀系列
EXTERNAL TURNING TOOLS

内圆车刀系列
INTERNAL TURNING TOOLS

槽刀系列
GROOVING TOOLS

螺纹刀系列
THREADING TOOLS

铣削系列
MILLING TOOLS

模块化工具系列
MODULAR TOOL SYSTEM

抗震刀杆系列
ANTI-SHOCK BORING TOOLS

配件
SPARE PARTS



阻尼减震车刀杆

Anti-Vibration Damped Tool Holder

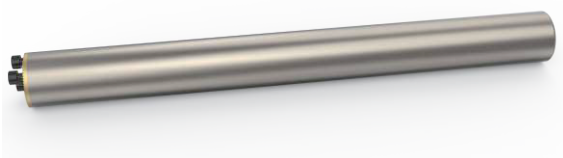

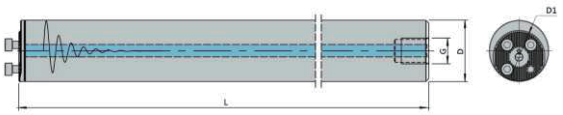

Ordering Code（规格型号）	Stock（库存）	Dimensions/mm（尺寸/mm）				连接刀头 Blade	螺丝 Screw	扳手 Wrench
		D	L	G	L/D			
D16-7D-156	●	16	160	G1/8	7	DT16	NLJ0310	L2.5
D16-10D-204-S	●	16	210	G1/8	10			
D16-12D-260-S	●	16	260	G1/8	12			
D20-7D-200	●	20	200	G1/4	7	DT20	NLJ03510	L2.5
D20-10D-260-S	●	20	260	G1/4	10			
D20-12D-320-S	●	20	320	G1/4	12			
D25-7D-255	●	25	255	G1/4	7	DT25	NLJ0412	L3.0
D25-10D-330	●	25	330	G1/4	10			
D25-12D-380-S	●	25	380	G1/4	12			
D25-140-430-S	●	25	430	G1/4	14			
D32-7D-320	●	32	320	G3/8	7	DT32	NLJ0516	L4.0
D32-10D-416	●	32	416	G3/8	10			
D32-12D-480-S	●	32	480	G3/8	12			
D32-14D-544-S	●	32	544	G3/8	14			
D40-7D-410	●	40	408	G1/2	7	DT40	NLJ0616	L5.0
D40-10D-528	●	40	528	G1/2	10			
D40-12D-608-S	●	40	608	G1/2	12			
D40-14D-688-S	●	40	688	G1/2	14			

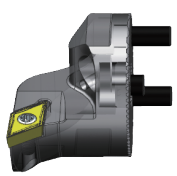

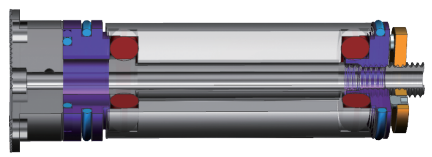



● Item in stock 标准库存　○ Order on demand 半成品库存

阻尼减震车刀杆

Anti-Vibration Damped Tool Holder

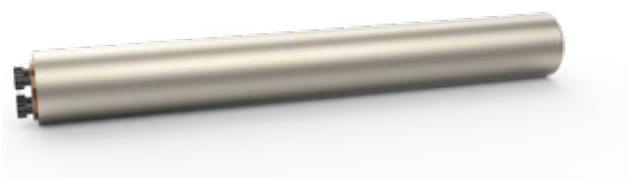

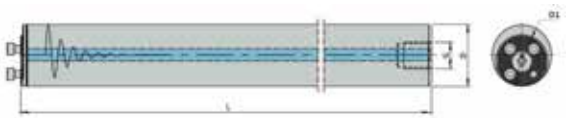

Ordering Code（规格型号）	Stock（库存）	Dimensions/mm（尺寸/mm）				连接刀头 Blade	螺丝 Screw	扳手 Wrench
		D	L	G	L/D			
D50-7D-518-DT40	○	50	518	G1/2	7	DT40	NLJ0620	L5.0
D50-10D-668-DT40	○	50	668	G1/2	10			
D50-12D-768-DT40-S	○	50	768	G1/2	12			
D50-14D-868-DT40-S	○	50	868	G1/2	14			
D60-7D-628-DT40	○	60	628	G3/4	7			
D60-10D-808-DT40	○	60	808	G3/4	10			
D60-12D-920-DT40-S	○	60	920	G3/4	12			
D60-14D-1040-DT40-S	○	60	1040	G3/4	14			
D80-7D-880	○	80	880	G3/4	7			
D80-10D-1200	○	80	1200	G3/4	10			





● Item in stock 标准库存　○ Order on demand 半成品库存

F**SCLCR/L





Ordering Code (规格型号)	Stock (库存)		Dimensions/mm (尺寸/mm)							刀片 Blade	螺钉 Screw	扳手 Wrench
	R	L	D	d	f	L	L1	H	a°			
F10M-SCLCR06-10D	●	○	13	10	7	150	100	9	13	CC**0602	MT2.5*6	FT-8
F12Q-SCLCR09-10D	●	○	16	12	9	180	120	11	10	CC**09T3	MT3.5*8	FT-15

F**STFCR/L



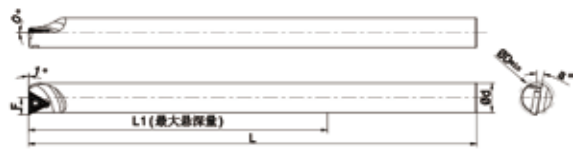

Ordering Code (规格型号)	Stock (库存)		Dimensions/mm (尺寸/mm)							刀片 Blade	螺钉 Screw	扳手 Wrench
	R	L	D	d	f	L	L1	H	a°			
F10M-STFCR11-10D	●	○	13	10	7	150	100	9	13	TC**1102	MT2.5*6	FT-8
F12Q-STFCR11-10D	●	○	16	12	9	180	120	11	10			

F**SDUCR/L



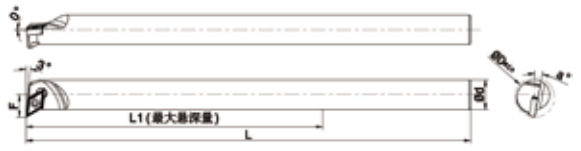

Ordering Code (规格型号)	Stock (库存)		Dimensions/mm (尺寸/mm)							刀片 Blade	螺钉 Screw	扳手 Wrench
	R	L	D	d	f	L	L1	H	a°			
F10M-SDUCR07-10D	●	○	15	10	9	150	100	9	12	DC**0702	MT2.5*6	FT-8
F12Q-SDUCR07-10D	●	○	18	12	11	180	120	11	110			

正型95° 正镗



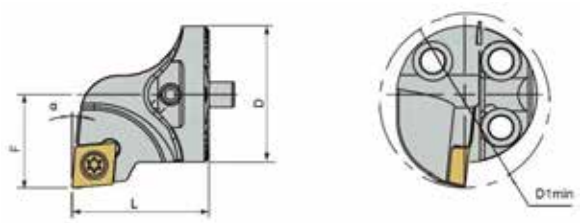

Ordering Code (规格型号)	Dimensions/mm (尺寸/mm)					刀片 Blade	螺钉 Screw	扳手 Wrench
	D	D1min	F	L	a°			
DT16-SCLCR/L06	16	20	11	20	5°	CC**0602	MT2.5*6	FT-8
DT20-SCLCR/L09	20	25	13	20	5°	CC**09T3	MT3.5*8	FT-15
DT25-SCLCR/L09	25	32	17	22	5°			
DT32-SCLCR/L09	32	40	22	32	5°			
DT40-SCLCR/L12	40	50	27	38	5°	CC*1204	MT5*11	FT-20

正型93° 正镗及仿形车



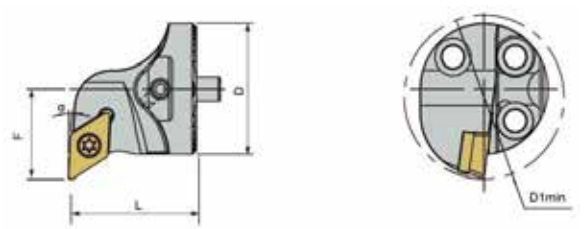

Ordering Code (规格型号)	Dimensions/mm (尺寸/mm)					刀片 Blade	螺钉 Screw	扳手 Wrench
	D	D1min	F	L	a°			
DT16-SDUCR/L07	16	20	11	20	3°	DC**0702	MT2.5*6	FT-8
DT20-SDUCR/L11	20	25	13	20	3°	DC**11T3	MT3.5*8	FT-15
DT25-SDUCR/L11	25	32	17	22	3°			
DT32-SDUCR/L11	32	40	22	32	3°			
DT40-SDUCR/L11	40	50	27	38	3°			

● Item in stock 标准库存
○ Order on demand 半成品库存

正型93° 正镗及仿形车



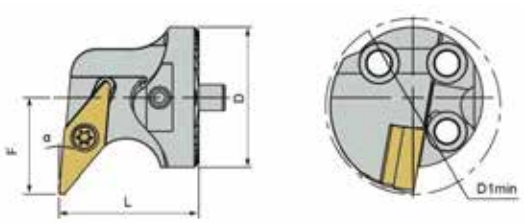

Ordering Code (规格型号)	Dimensions/mm (尺寸/mm)					刀片 Blade	螺钉 Screw	扳手 Wrench
	D	D1min	F	L	a°			
DT20-SVUBR/L11	20	25	13	20	3°	VB**1103	MT2.5*6	FT-8
DT25-SVUBR/L11	25	32	17	22	3°			
DT32-SVUBR/L16	32	40	22	32	3°	VB**1604	MT3.5*8	FT-15
DT40-SVUBR/L16	40	50	27	38	3°			

正型62.5° 仿形车



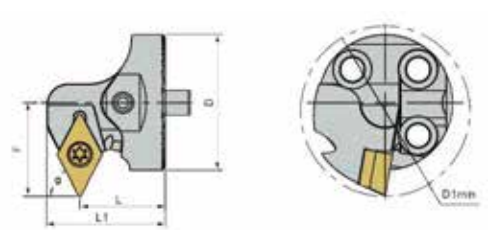

Ordering Code (规格型号)	Dimensions/mm (尺寸/mm)						刀片 Blade	螺钉 Screw	扳手 Wrench
	D	D1min	F	L	L1	a°			
DT16-SDWCR/L07	16	22	13	15	19	62.5°	DC**0702	MT2.5*6	FT-8
DT20-SDWCR/L07	20	27	15	15	19	62.5°			
DT25-SDWCR/L07	25	33	18	15	19	62.5°			
DT32-SDWCR/L11	32	40	22	20	28	62.5°	DC**11T3	MT3.5*8	FT-15
DT40-SDWCR/L11	40	50	27	20	28	62.5°			

● Item in stock 标准库存 ○ Order on demand 半成品库存

正型93° 反镗



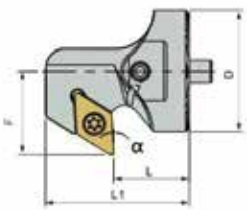



Ordering Code（规格型号）	Dimensions/mm（尺寸/mm）						刀片 Blade	螺钉 Screw	扳手 Wrench
	D	D1min	F	L	L1	a°			
DT16-SDZCR/L07	16	22	13	15	25	3°	DC**0702	MT2.5*6	FT-8
DT20-SDZCR/L07	20	27	15	15	27	3°			
DT25-SDZCR/L07	25	33	18	15	27	3°			
DT32-SDZCR/L11	32	40	22	20	38	3°	DC**11T3	MT3.5*8	FT-15
DT40-SDZCR/L11	40	50	27	20	38	3°			

负型95° 正镗



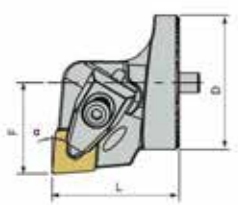



Ordering Code（规格型号）	Dimensions/mm（尺寸/mm）					刀垫 Knife pad	销钉 Screw	压板 Pressing plate	螺钉 Screw	弹簧 Screw	扳手 Wrench
	D	D1min	F	L	a°						
DT40-DCLNR/L12	40	50	27	38	5°	CN**1204	DXD0614	DYB2413A	ZZM0616	TH0810	L4.0

● Item in stock 标准库存　○ Order on demand 半成品库存



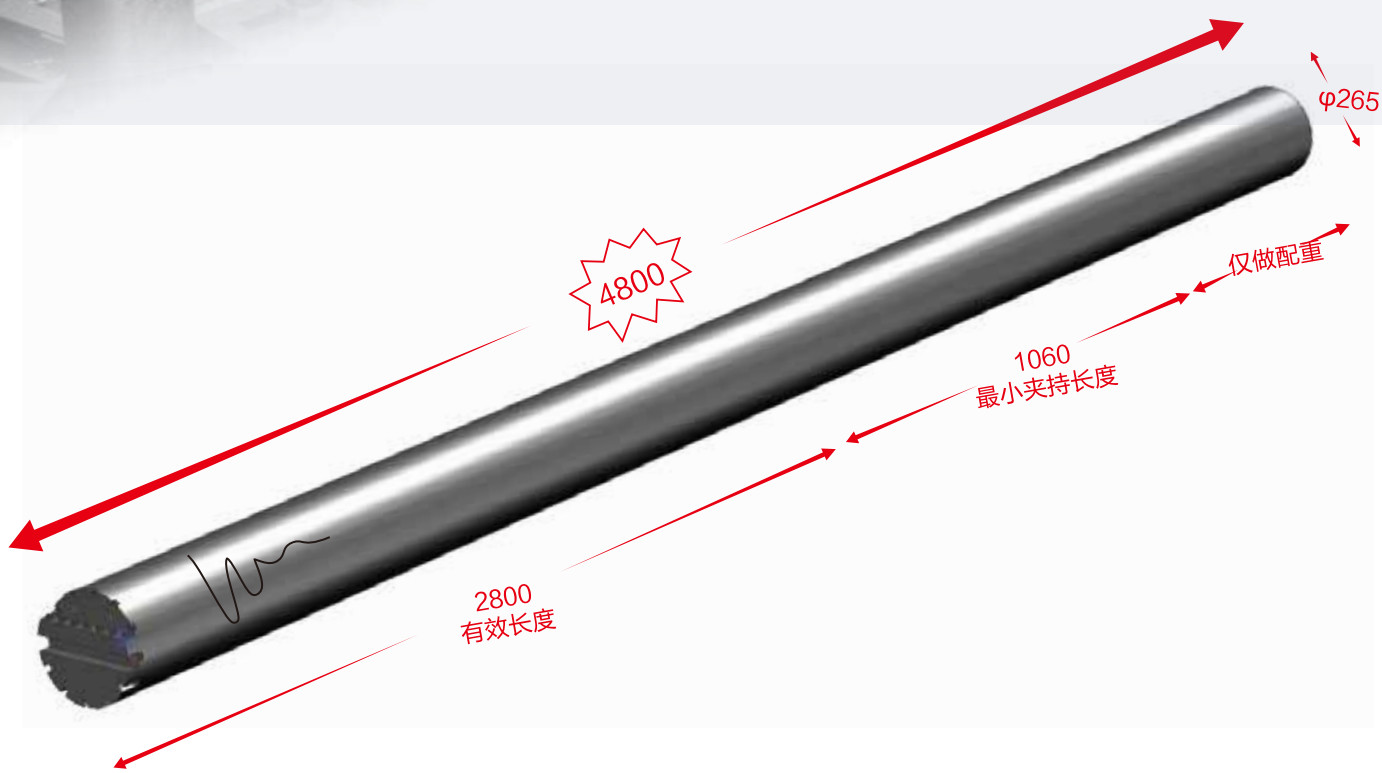
φ265
4800
仅做配重
1060
最小夹持长度
2800
有效长度

阻尼减振车刀使用说明
User Guide for Damping Turning Tool

减振刀具安装及调整

1.准备
安装配合部位必须擦拭干净，如：减振刀杆及刀头V型定位槽、减振刀杆柄部外圆及安装座内孔，见下图A、B两处示意位置。

Assembly and Adjusting

Preparation

Wipe clean the positions which need to be assembled,like V geometric slot on the cartridge and shank,the end of the shank which will be connected with adaptor,and internal hole on the clamping holder.See A and B position on the following visual.

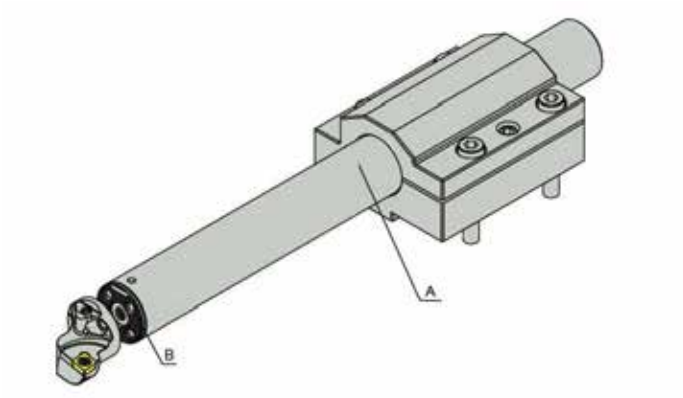

2.刀杆的安装
安装夹持长度不少于刀杆径的4倍，使用开口夹套等抱紧装夹方式，禁止使用螺钉直压等锁紧方式，长时间使用必须使用内冷却，如下图所示。

Assembly for the Shank

The clamping length should not be less than 4 L/D ratio.Suggest using the clamping cover wity opening method and other holdingclamping methods. Do not use screw clamping method. Use inner cooling please when working a long time.

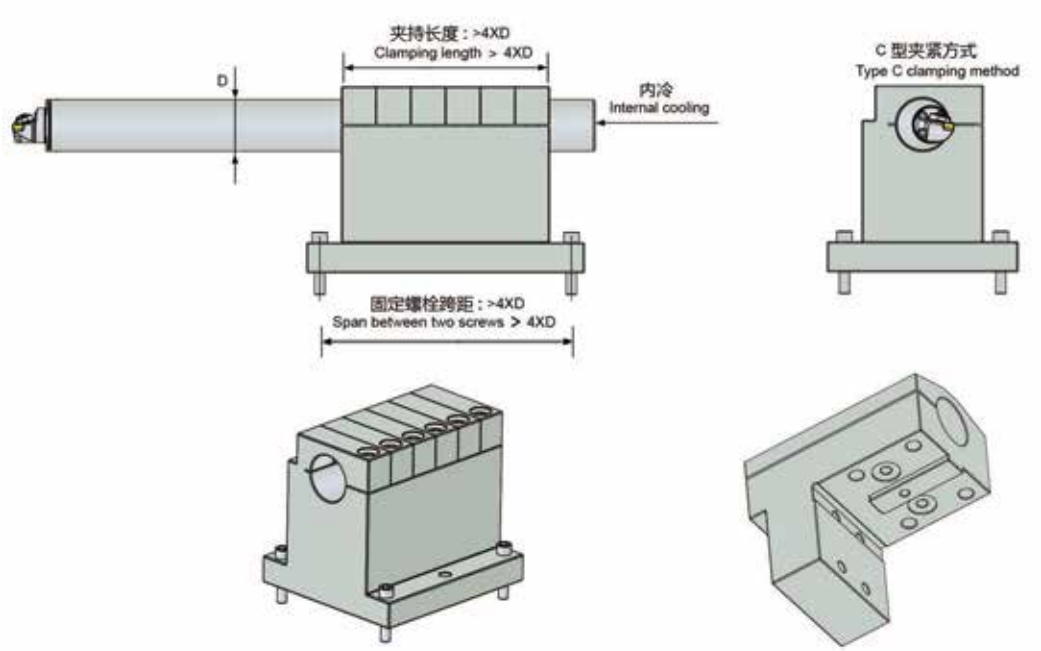

● Item in stock 标准库存　○ Order on demand 半成品库存

阻尼减振车刀使用说明
User Guide for Damping Turning Tool

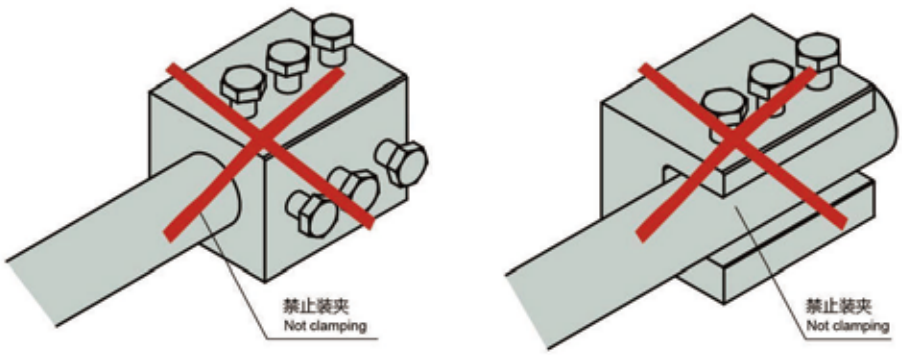

2.中心高调整
首次安装刀杆需要使用专用中心高校准工具，安装于车刀杆齿形槽接口处，锁紧，沿机床X轴方向校平基准平面0.01以内，锁紧刀杆后拆掉校准工具。

Adiusting the Height of Centre
Exclusive calibration tool for the height of centre should be used when assembling the shank when the first time.

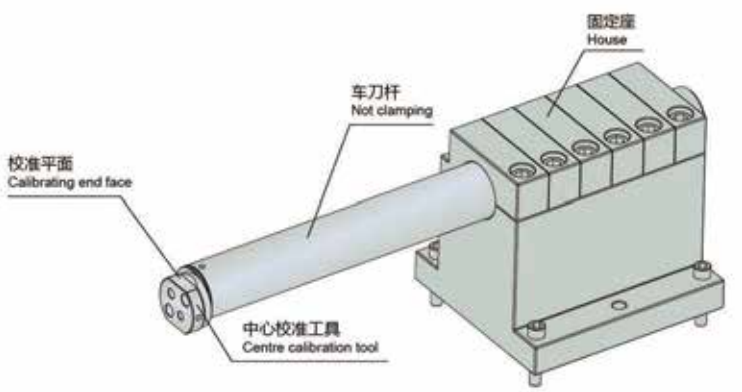

4. 安装正确的车刀头

Assemble the right cartridge,see below figure

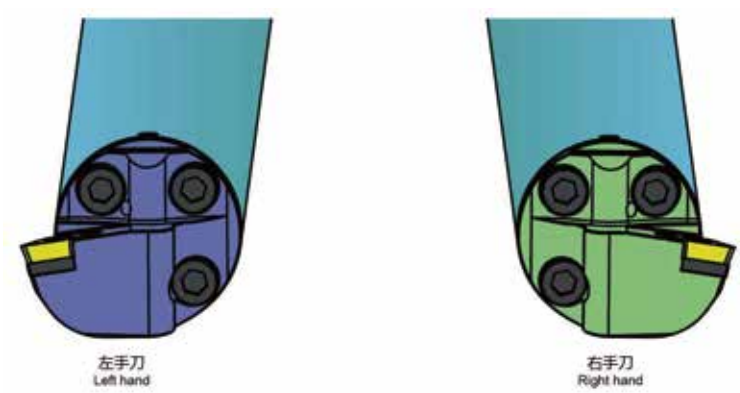

● Item in stock 标准库存 ○ Order on demand 半成品库存

NiceCutt

恩 缘 与 你　思 愿 同 行

EXCELLENT　NICECUTTER　SOLUTIONS

恩思切削工具（江苏）有限公司

ENS CUTTNIG TOOLS CO.,LTD.

联络电话 0519-68861759

地址：江苏省常州市武进高新区龙潜路97-6 邮箱：manager@ens-tools.com